Typical Flanged Flush Window - No Trim

HCS 5.6

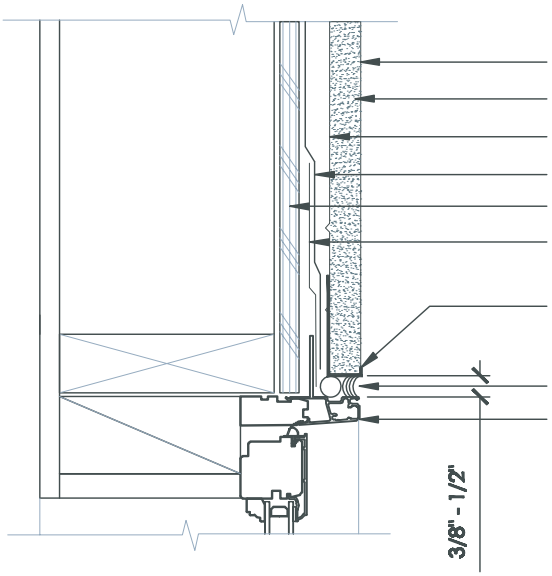

SHURKOTE FINISH COAT
SHURKOTE CEMENTITIOUS BASE COAT
2.5 METAL LATH OR 1" 20GA STUCCO MESH (MIN)
APPROVED WEATHER RESISTANT BARRIER
SHEATHING
HEAD FLASHING MEMBRANE, LAP OVER WINDOW NAILING FIN
CASING BEAD, OVER FLASHING MEMBRANE AND WATER RESISTANT BARRIER
APPROVED SEALANT (BY OTHERS)
WINDOW

HEAD & JAMB

NOTE:
NO FLASHING SHOWN IN THIS DETAIL. SEE HCS 1.1 FO HEAD TYPE FLASHING DETAILS.

NOTE:
ALTERNATE DETAIL AT WINDOW HEAD WOULD BE METAL FLASHING MEMBRANE AT JAMB GOES BEHIND WINDOW FIN.

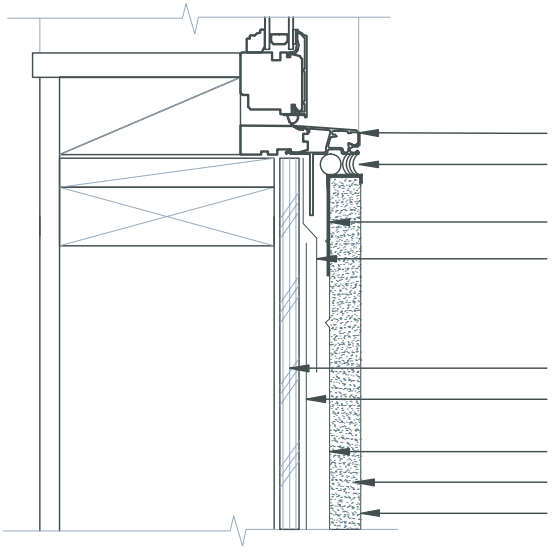

WINDOW
APPROVED SEALANT (BY OTHERS)
CASING BEAD
SILL FLASHING MEMBRANE INSTALLED UNDER WINDOW NAILING FIN
SHEATHING
APPROVED WEATHER RESISTANT BARRIER, LAP UNDER FLASHING MEMBRANE
2.5 METAL LATH OR 1" 20GA STUCCO MESH (MIN)
SHURKOTE CEMENTITIOUS BASE COAT
SHURKOTE FINISH COAT

SILL

UltraKote Products, Inc.
327 South 27th Avenue
Phoenix, Arizona 85009
Phone: 800.224.2344
Fax: 602.272.6445
www.ultrakoteproducts.com